HARVIA COLOUR LIGHT

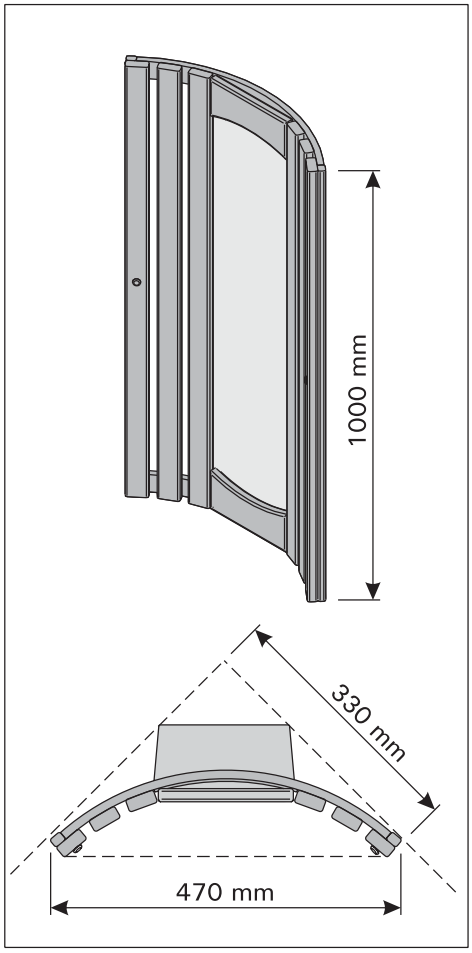

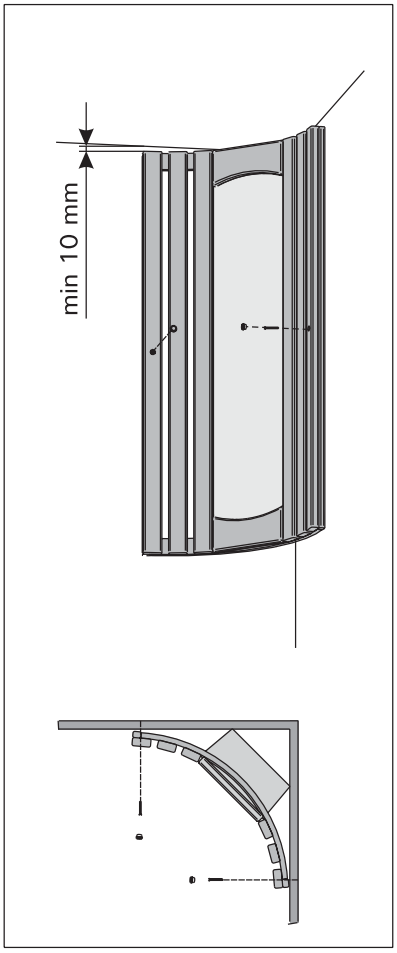

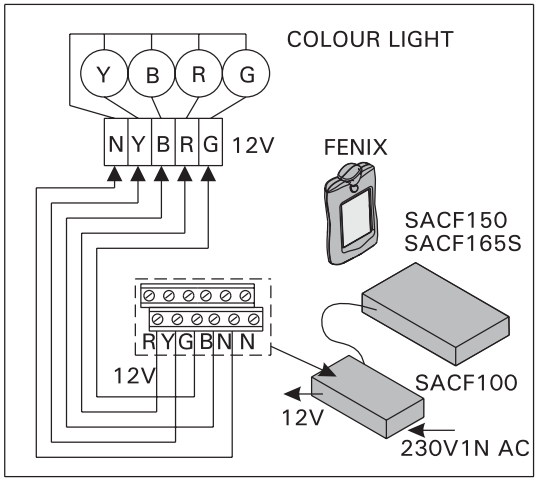

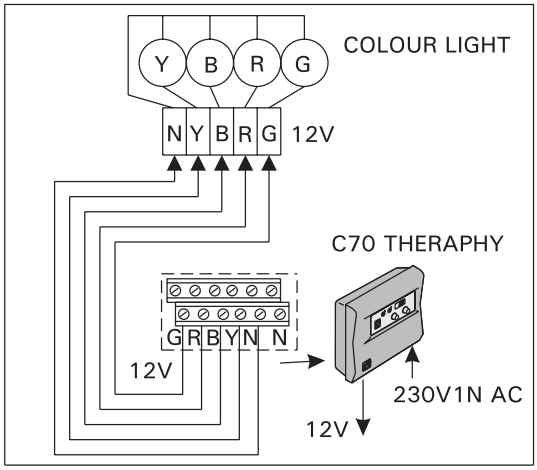

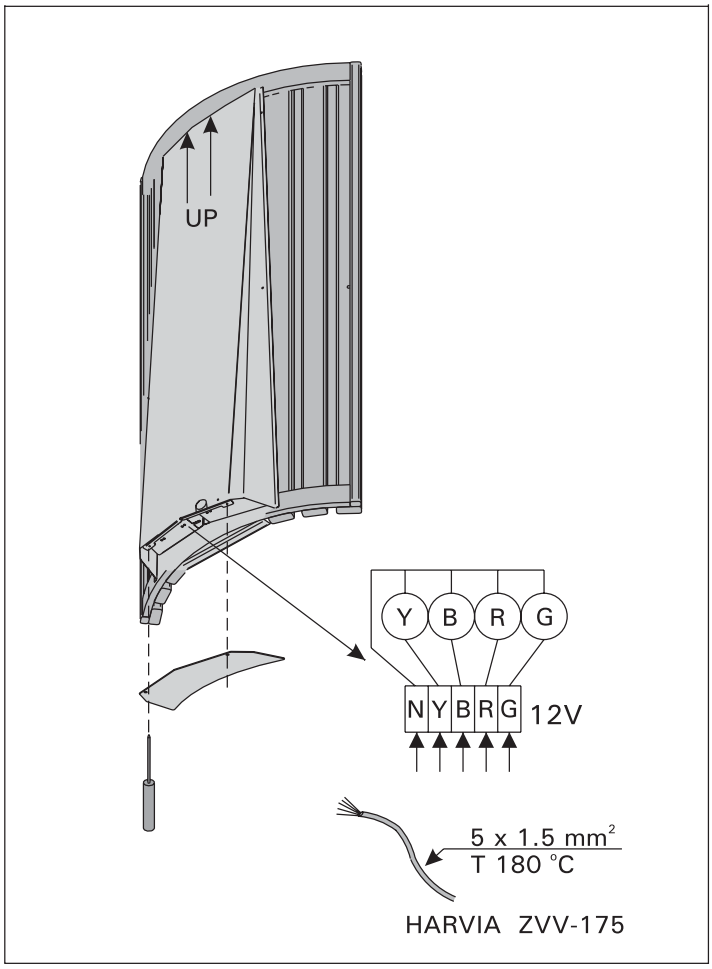

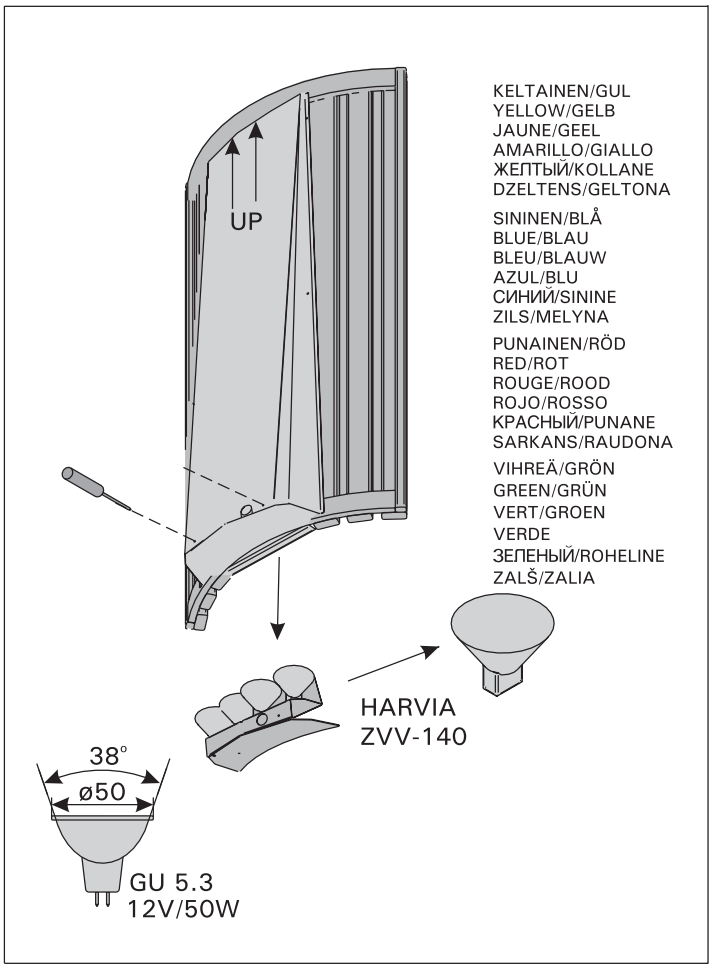

25082005